ROMER

ROMER Absolute Arm

Product Brochure

Metrology to go.

HEXAGON METROLOGY

The ROMER Absolute Arm. Absolutely Groundbreaking.

Portable measuring arms have fundamentally changed metrology. They make 3D measurement easy and fast. As a result, user productivity is heightened and measurement time is slashed. Where traditional measuring methods are impractical or impossible manufacturers, in more than 100 countries, rely on ROMER products to deliver the essential information quickly.

The ROMER Absolute Arm heralds a new era in this success story. ROMER produces a portable coordinate measuring machine which combines the entire experience of the Hexagon Metrology network.

ROMER measuring arms stand for maximum mobility in industrial metrology. Carbon fibre tubes ensure stability while maintaining the lowest possible weight. Fully integrated laser scanners make the ROMER Absolute Arm a top performing system for all metrology tasks.
Absolute encoders, which assign an absolute value to each position of the arm, are used for the first time ever in a portable measuring arm. Initialisation is not necessary. Simply take the measuring arm to the part, switch it on and start measuring.

ROMER – absolutely portable CMMs.

2

1

ROMER technology. Measurable benefits for the industry.

Production requires accuracy. There is no room for errors on the shop floor between machines and cranes, and it is here, under difficult conditions, where the ROMER Absolute Arm comes into its own. It is extremely lightweight, absolutely stable and ensures reliable measurement results.

ROMER Absolute Arm – mobile accuracy.

Typical Industries :

- Automotive
- Aerospace
- General Industries
- Power Generation / Wind Energy
- Universities / Schools
- Medical Equipment
- Piping & Tubing
- Agriculture & Heavy Equipment
- Shipbuilding
- Railway
- Archaeological

Typical Measuring Applications:

- Sheet Metal Parts
- Dies & Molds / Tooling
- Machined Parts
- Jigs & Fixtures
- Crash Test
- Tubes & Tube Assembly
- CAD-to-Part comparison
- Alignment
- Reverse Engineering

Customers on the ROMER Absolute Arm.

"We've been using portable measuring arms from ROMER for many years now. The ROMER Absolute Arm is a class of its own. Thanks to absolute encoders, the operation is much easier than before, we can measure faster and achieve accurate, reliable results at any time."

Marc Rohr, Liebherr Hydraulikbagger GmbH
Kirchdorf, Germany

"With the ROMER Absolute Arm, we are now capable of CNC machining simple to complex 3D surface parts and cut our design time down by up to 80%. It is an extremely productive tool with almost limitless opportunities."

Donovan Barnes, Habitat Industries, Cape Town, South Africa

1 Fast scanning of automotive parts. 2 Accurate part inspection. 3 Quick and easy quality check of plastic and carbon fibre parts.
4 Quick check of precision parts. 5 Sheet metal inspection scanning.

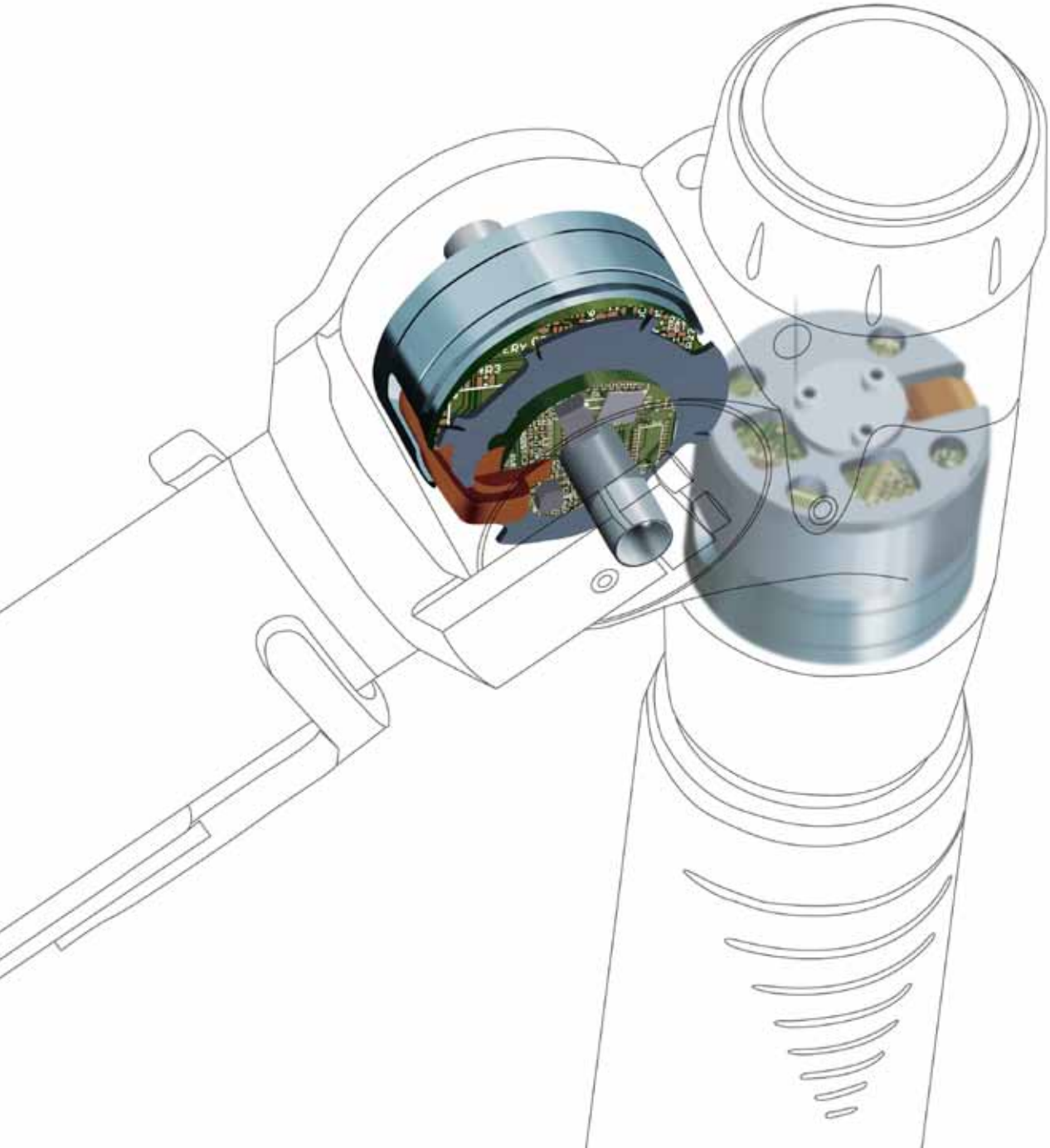

ROMER Absolute Encoders.

A first in the world of portable measuring arms: The ROMER Absolute Arm features absolute encoders and is therefore the first measuring arm which does not require referencing before measurement. Absolute Encoders simplify the operation: When the arm is turned on, it's ready to go.

1 Thanks to absolute encoders, there's no homing procedure before the measurement starts. 2 Absolute encoders in the arm's primary axes.

ROMER Absolute Connectivity.

ROMER Feature Pack Port for data communication

The ROMER Absolute Arm has a specific standard for data communication. If required, with the ROMER Feature Pack Port interface, the Absolute Arm can be used as a fully wireless CMM.

RDS – the ROMER tool for software integration

RDS is the virtual image of a ROMER measuring arm. This software, with its intuitive operation, facilitates probe calibration and includes a diagnosis function for checking the measuring accuracy of the arm in compliance with international standards.

ROMER Feature Packs. Extension means integration.

ROMER Feature Packs unfold the full potential of a portable measuring arm. These optional feature packs utilise the ROMER Feature Pack Port interface. All extensions are perfectly coordinated with the ROMER Absolute Arm and are part of an integrated system.

The ROMER Mobility Pack includes a battery and WiFi communication – maximum flexibility for the ROMER Absolute Arm.

The ROMER Scanning Pack is the interface for laser scanners. They connect directly to the arm.

Feature packs are thermally and mechanically stable, easy to exchange for the user and open for new technologies and additional accessories.

1 ROMER Feature Packs unfold a measuring arm's full potential. 2 Maximum mobility with WiFi and battery.

2

1

3

4

5

ROMER ergonomics. Accuracy made easy.

Carbon fibre structure. Absolute operational safety with SpinGrip and a wrist with an incorporated mouse function. Illumination of the part and an integrated digital camera. The ROMER Absolute Arm is an all around balanced measuring instrument. Its operation is a matter of routine after a short time, even in locations where traditional CMMs could never perform.

Infinite Rotation
ROMER's patented infinite rotation of the principal axes allows a comfortable inspection of hard-to-reach areas.

Integrated Zero-G counterbalance
An optimized counterbalance reduces operator fatigue and delivers effortless control in all positions, including above and below the centreline.

ROMER efficiency. A hot tip for cool calculation.

A portable measuring arm is a good investment. The time required to train users is minimal. Even inexperienced personnel will produce reliable measuring results in a short time due to the user-friendliness of the ROMER Absolute Arm. Inspection and control throughput is increased dramatically, and because the ROMER Absolute Arm helps to ensure quality, there is a fast return on investment. The ROMER Absolute Arm increases productivity and minimises off-spec production – in the long run and with absolute efficiency.

1 Form follows function: Robust handles make the arm mobile. 2 Carbon fibre tubes. 3 Top balance for highest accuracy.
4 The SpinKnob supports the user in an ergonomic arm position. 5 The SpinGrip reduces operator fatigue, especially with long arms.

2

1

ROMER Absolute Arm.
Efficient tactile measurements.

The ROMER Absolute Arm with six rotation axes is designed for highly accurate tactile measurements on countless work pieces. The six axis ROMER Absolute Arm allows reliable part inspection on features of sheet metal parts, plastic components or carbon fibre structures.

The ergonomic wrist includes three programmable buttons and can be used as remote mouse to control the measurement software. A digital camera in the wrist helps with documenting measurement jobs, the LED work light facilitates measuring areas on the work piece that are dark and difficult to access.

Thanks to the TESA kinematic joint, the ROMER Absolute Arm automatically recognizes which probe is mounted on the wrist. Probe calibration is a one time process and afterwards, changing the probe takes a matter of seconds. Just plug in the new probe and measure.

ROMER Absolute Arm six axis: ergonomic, accurate and fast.

1 ROMER Absolute Arm with six rotation axes – the most accurate ROMER portable measuring arm. 2 Wrist with programmable buttons, integrated digital camera, LED light and mouse function. 3 Automated probe recognition.

2

1

ROMER Absolute Arm with integrated scanner. Freedom of movement.

The ROMER Absolute Arm is available with a fully integrated and certified laser scanner system with seven rotation axes. The laser scanner is a part of the arm's wrist. Together with the standard touch probe, this system is an all-purpose metrology tool for a multitude of applications. 3D digitizing, 3D modelling, point cloud inspection, reverse engineering, rapid prototyping or copy milling are the most frequent laser scanner applications and with the ROMER Absolute Arm, these tasks go mobile. The laser scanner is tuned for a vast variety of materials without compromise in accuracy.

This low-weight laser scanner solution comes as a cost-efficient package. No additional cable or controller between the laser scanner and the portable measuring arm, permits the ROMER Absolute Arm's infinite rotation of the main movement axis. Thanks to the perfect balance, the ROMER Absolute Arm with the integrated scanner, can be operated with one hand.

ROMER Absolute Arm with integrated scanner: universal, truly integrated and certified laser scanner system.

1 Seven rotation axis, outstanding balance. 2 Completely integrated laser scanner system, low weight, top usability.
3 Scanning and probing interchangeable, automated probe recognition.

2

1

ROMER Absolute Arm with external scanner. Modular high-end scanning platform.

The ROMER Absolute Arm with external scanner is designed for the high performance laser scanner CMS 108 from Hexagon Metrology. Third party scanners can also be connected.

With CMS 108, the ROMER Absolute Arm offers first-class performance even on complex surfaces and on work pieces made up of the most challenging material types. Teaching of the material is not required because the automatic laser power control of the CMS 108 automatically adapts to the surface conditions. CMS 108 is the first ever laser scanner with a zoom function - providing three different line widths.

The ROMER Absolute Arm with external scanner is a premium portable CMM for uncompromising scanning requirements.

ROMER Absolute Arm with external scanner: high performance portable laser scanning platform.

1 ROMER Absolute Arm with external laser scanner CMS 108 by Hexagon Metrology. 2 Ergonomic high-performance scanning system.
3 The ROMER Absolute Arm with seven rotation axes can be used as a probing-only tool.

1

2

ROMER Absolute Encoders – turn on and measure

SpinKnob & SpinGrip
easy handling

Measuring volume up to 4.5 m

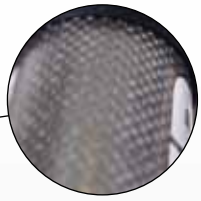

Rigid carbon fibre tubes

Feature Pack technology – absolute connectivity

LED and digital camera integrated in wrist

Automated Probe Recognition – TESA probes

Magnetic base included in 75 series

3

4

5

ROMER Absolute Arm at a glance.

ROMER Absolute Arm with integrated scanner

- The universal scanning solution – accurate high-speed scanning for all types of parts and applications
- Fully integrated scanning solution – no additional cables or controller box
- Semi-automatic laser power control – allows scanning on different surface types without any operator interaction
- No warm-up time
- Scanning system certified in relation to B89.4.22
- No coating or surface preparation necessary
- Scanning and probing interchangeable, automated probe recognition

ROMER Absolute Arm with external scanner

- Designed for Hexagon Metrology CMS 108 high performance scanner or many other third party scanners
- Elaborated system design – no external cable around the arm
- TESA connector – easily changeable, only one calibration
- Open platform for future integrations thanks to TESA connector and Feature Pack technology

ROMER Accessories and Benefits

Tripods
Robust lightweight tripods extend the operating range of portable measuring arms and make them independent of fixed operating surfaces.

ROMER rBASE magnetic stand
ROMER rBASE provides the necessary support for portable measuring arms. These can be simply attached to the stand with a screw adapter to ensure that the measuring arm always has a firm stance.

Probes
Different probes for different requirements: Specific probes from Hexagon Metrology are compatible with the ROMER Absolute Arm, no matter if the measurement task requires probing, scanning or tube inspection. Probes are changed within a few seconds due to automated probe recognition.

Certificates and certification tools
A certified sphere for probe calibration comes as standard with every ROMER Absolute Arm. To check the arm's volume accuracy, a certified checking bar is available. A certification according to VDI/VDE 2617-9 is also an option that is available.

1 ROMER Absolute Arm with integrated scanner. 2 ROMER Absolute Arm with external scanner. 3 A variety of probes with various lengths and tip sizes are available to suit different measuring applications. 4 ROMER rBase provides stable support for the ROMER Absolute Arm. 5 Tube inspection probe.

ROMER Absolute Arm. Specifications.

6-Axis Probing Specifications – 73 series

Model	Measuring Range	Point Repeatability[1]	Volumetric Accuracy[2]	Arm Weights
7315	1.5 m / 4.9 ft.	± 0.025 mm / 0.0010 in.	± 0.037 mm / 0.0015 in.	7.1 kg / 15.6 lbs
7320	2.0 m / 6.6 ft.	± 0.030 mm / 0.0012 in.	± 0.042 mm / 0.0017 in.	7.4 kg / 16.3 lbs
7325	2.5 m / 8.2 ft.	± 0.038 mm / 0.0015 in.	± 0.051 mm / 0.0020 in.	7.7 kg / 17.0 lbs
7330	3.0 m / 9.8 ft.	± 0.065 mm / 0.0026 in.	± 0.095 mm / 0.0037 in.	8.0 kg / 17.6 lbs
7335	3.5 m / 11.5 ft.	± 0.095 mm / 0.0037 in.	± 0.130 mm / 0.0051 in.	8.3 kg / 18.3 lbs
7340	4.0 m / 13.1 ft.	± 0.120 mm / 0.0047 in.	± 0.149 mm / 0.0059 in.	8.6 kg / 19.0 lbs
7345	4.5 m / 14.8 ft.	± 0.150 mm / 0.0059 in.	± 0.170 mm / 0.0067 in.	8.9 kg / 19.6 lbs

6-Axis Probing Specifications – 75 series

7520	2.0 m / 6.6 ft.	± 0.016 mm / 0.0006 in.	± 0.023 mm / 0.0009 in.	7.7 kg / 17.0 lbs
7525	2.5 m / 8.2 ft.	± 0.020 mm / 0.0008 in.	± 0.029 mm / 0.0011 in.	8.0 kg / 17.6 lbs
7530	3.0 m / 9.8 ft.	± 0.033 mm / 0.0013 in.	± 0.049 mm / 0.0019 in.	8.3 kg / 18.3 lbs
7535	3.5 m / 11.5 ft.	± 0.043 mm / 0.0017 in.	± 0.061 mm / 0.0024 in.	8.6 kg / 19.0 lbs
7540	4.0 m / 13.1 ft.	± 0.061 mm / 0.0024 in.	± 0.075 mm / 0.0030 in.	8.9 kg / 19.6 lbs
7545	4.5 m / 14.8 ft.	± 0.070 mm / 0.0028 in.	± 0.082 mm / 0.0032 in.	9.2 kg / 20.3 lbs

All specifications according to B89.4.22 and VDI/VDE 2617-9.

[1] The **Point Repeatability Test** is the reference test to determine measurement arm repeatability with ball probe. The cone is in front of the machine. Points are measured from multiple approach directions. The average point and the deviation of each point to the average center are calculated. The result is the maximum range divided by two.

[2] The **Volumetric Accuracy Test** most accurately represents the reasonable expectations for machine performance in practical measuring applications since it involves measuring a certified length standard many times in several locations and orientations and compares the resultant measurements to the actual length. The Volumetric Length Accuracy Test is the most appropriate test for determining machine accuracy and repeatability. The result is the maximum deviation of the measuring distance less the theoretical length.

Ambient conditions

Working temperature:	0˚C – 50˚C (32°F – 122°F)
Storage temperature:	-30˚ – 70˚ C (-22°F – 158°F)
Relative humidity:	10% – 90% non-condensing
Operational elevation:	0 – 2000 m (0 – 6600 ft)

Marks of conformity

CE Compliance:	Yes

Power requirement

Universal worldwide voltage	110V – 240V

7-Axis Probing and Scanning Specifications – 73 series

Model[3]	Measuring Range	Probing Point Repeatability[1]	Probing Volumetric Accuracy[2]	Scanning System Accuracy SI[4] (with RS1)	Scanning System Accuracy SE[4] (with CMS 108)	Arm Weights SI	Arm weights SE
7320SI/SE	2.0 m / 6.6 ft.	± 0.044 mm / 0.0017 in.	± 0.061 mm / 0.0024 in.	± 0.079 mm / 0.0031 in	± 0.075 mm / 0.0030 in.	8.3 kg / 18.3 lbs.	7.9 kg / 17.4 lbs
7325SI/SE	2.5 m / 8.2 ft.	± 0.049 mm / 0.0019 in.	± 0.069 mm / 0.0027 in.	± 0.084 mm / 0.0033 in.	± 0.080 mm / 0.0031 in.	8.6 kg / 19.0 lbs.	8.2 kg / 18.1 lbs
7330SI/SE	3.0 m / 9.8 ft.	± 0.085 mm / 0.0033 in.	± 0.110 mm / 0.0043 in.	± 0.119 mm / 0.0047 in.	± 0.113 mm / 0.0044 in.	8.9 kg / 19.6 lbs.	8.5 kg / 18.7 lbs
7335SI/SE	3.5 m / 11.5 ft.	± 0.108 mm / 0.0043 in.	± 0.136 mm / 0.0054 in.	± 0.147 mm / 0.0058 in.	± 0.140 mm / 0.0055 in.	9.2 kg / 20.3 lbs.	8.8 kg / 19.4 lbs
7340SI/SE	4.0 m / 13.1 ft.	± 0.120 mm / 0.0047 in.	± 0.168 mm / 0.0066 in.	± 0.181 mm / 0.0071 in.	± 0.172 mm / 0.0068 in.	9.5 kg / 20.9 lbs.	9.1 kg / 20.1 lbs
7345SI/SE	4.5 m / 14.8 ft.	± 0.156 mm / 0.0061 in.	± 0.198 mm / 0.0078 in.	± 0.214 mm / 0.0084 in.	± 0.203 mm / 0.0080 in.	9.8 kg / 21.6 lbs.	9.4 kg / 20.7 lbs

7-Axis Probing and Scanning Specifications – 75 series

7520SI/SE	2.0 m / 6.6 ft.	± 0.023 mm / 0.0009 in.	± 0.033 mm / 0.0013 in.	± 0.058 mm / 0.0023 in.	± 0.053 mm / 0.0021 in.	8.6 kg / 19.0 lbs.	8.2 kg / 18.1 lbs
7525SI/SE	2.5 m / 8.2 ft.	± 0.028 mm / 0.0011 in.	± 0.039 mm / 0.0015 in.	± 0.063 mm / 0.0025 in.	± 0.058 mm / 0.0023 in.	8.9 kg / 19.6 lbs.	8.5 kg / 18.7 lbs
7530SI/SE	3.0 m / 9.8 ft.	± 0.048 mm / 0.0019 in.	± 0.066 mm / 0.0026 in.	± 0.083 mm / 0.0033 in.	± 0.078 mm / 0.0031 in.	9.2 kg / 20.3 lbs.	8.8 kg / 19.4 lbs
7535SI/SE	3.5 m / 11.5 ft.	± 0.061 mm / 0.0024 in.	± 0.093 mm / 0.0037 in.	± 0.101 mm / 0.0040 in.	± 0.096 mm / 0.0038 in.	9.5 kg / 20.9 lbs.	9.1 kg / 20.1 lbs
7540SI/SE	4.0 m / 13.1 ft.	± 0.074 mm / 0.0029 in.	± 0.106 mm / 0.0042 in.	± 0.119 mm / 0.0047 in.	± 0.114 mm / 0.0045 in.	9.8 kg / 21.6 lbs.	9.4 kg / 20.7 lbs
7545SI/SE	4.5 m / 14.8 ft.	± 0.088 mm / 0.0035 in.	± 0.126 mm / 0.0050 in.	± 0.138 mm / 0.0054 in.	± 0.133 mm / 0.0052 in.	10.1 kg / 22.3 lbs.	9.7 kg / 21.4 lbs

All specifications in relation to B89.4.22.

[3] **SI** designates the ROMER Absolute Arm with integrated scanner, **SE** designates the ROMER Absolute Arm with external scanner.

[4] **The Scanning System Accuracy Test** most accurately represents the reasonable expectations for machine performance in practical measuring applications while using the laser scanning method. The test consists of measuring a matte grey sphere with 5 different arm articulations. In each articulation of the arm the sphere is scanned from 5 different directions such that the majority of the sphere is scanned. The result is the maximum 3D center to center distance of the 5 spheres.

ROMER Absolute Arm.
Laser scanners.

Scanning Sensor Specifications

	Integrated scanner RS1	**External scanner Hexagon CMS 108**
Max. Point acquisition rate	30'000 Points/s	30'000 Points/s
Points per Line	1000	2000
Line Rate	30 Hz	53 Hz
Line width	65 mm	120 mm / 60mm / 25 mm
Stand off	150mm ± 50 mm	170mm ± 40 mm
Point spacing (min)	0.046 mm	0.025 mm
Laser power control	Semi-automatic – per line	Fully automatic – per point
Accuracy (2 sigma)[5]	30 µm	20 µm
Weight	340 g	398 g
Controller	No	Yes
Laser Safety	Class 2M	Class 2
Working temperature	5°C – 40°C (41°F – 104°F)	10°C – 42°C (50°F – 108°F)

[5] The **sensor accuracy** is defined as the excursion of the XY location of a calibration artefact through the measuring range of the sensor.

ROMER

Coordinate measuring machines for research, development, production and assembly in their most mobile form – this is what ROMER stands for in the global Hexagon Metrology network. The portable measuring arms in which ROMER specialises are produced in Europe and the United States in compliance with stringent quality and environmental standards.
ROMER measuring arms permit tactile or optical 3D measurement. Stability, low weight and simple operation are their key advantages.

ROMER. Metrology to go.

E-Mail info@hexagonmetrology.com
www.hexagonmetrology.com

Regional sales & support centres:
www.romer.com

Printed in Switzerland. August 2010

781090

HEXAGON METROLOGY